RIVA MINI 12, B

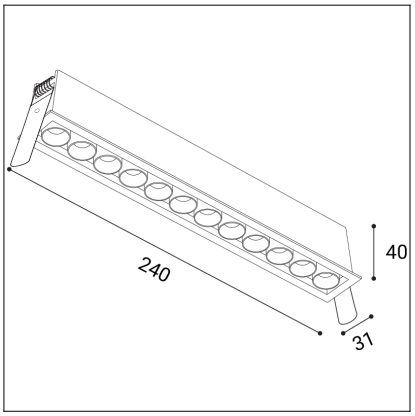
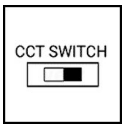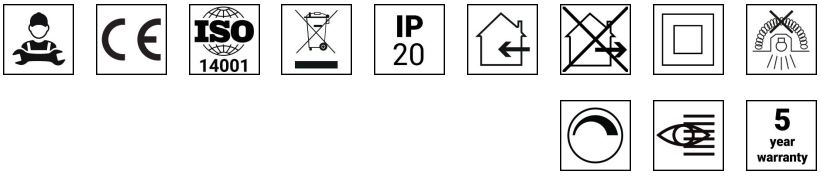
Code:	2560353D
Color:	BLACK / 9005
Material:	ALUMINIUM/PC
Power:	20W
Color temperature:	3000K/3500K/4000K
Lumen output:	1600lm
Efficacy:	80lm/W
Color rendering index:	90+
SDCM:	< 3
Light beam angle:	38°
Light Source:	LED
Dimmable:	DALI/PUSH
LED lifetime:	L80B20 50.000h
Driver:	500 mA
Voltage / Frequency:	220-240V AC, 50-60Hz
Dimensions luminaire:	240x31x40 mm
Installation hole:	236 x 27 mm
Product weight kg:	0.35
Package dimensions:	265x60x55 mm