RIVA MINI 6, B

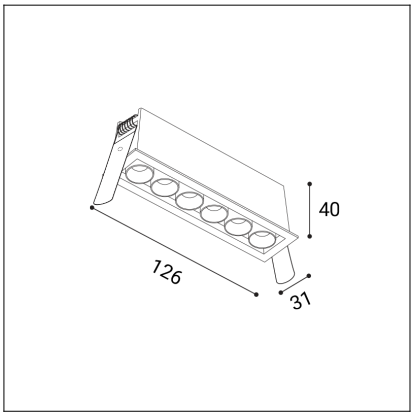
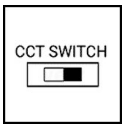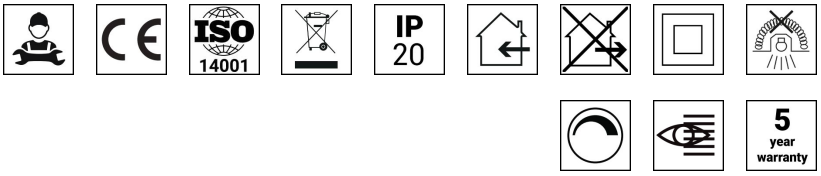
Code:	2560273DT
Color:	BLACK / 9005
Material:	ALUMINIUM/PC
Power:	10W
Color temperature:	2700K/3000K/4000K
Lumen output:	800lm
Efficacy:	80lm/W
Color rendering index:	90+
SDCM:	< 3
Light beam angle:	38°
Light Source:	LED
Dimmable:	TRIAC
LED lifetime:	L80B20 50.000h
Driver:	250 mA
Voltage / Frequency:	220-240V AC, 50-60Hz
Dimensions luminaire:	126x31x40 mm
Installation hole:	122 x 27 mm
Product weight kg:	0.2
Package dimensions:	135x55x85 mm