MILA 60, B

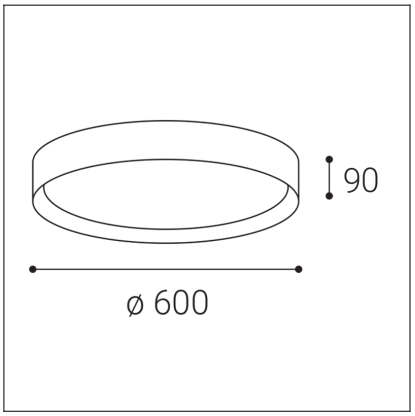

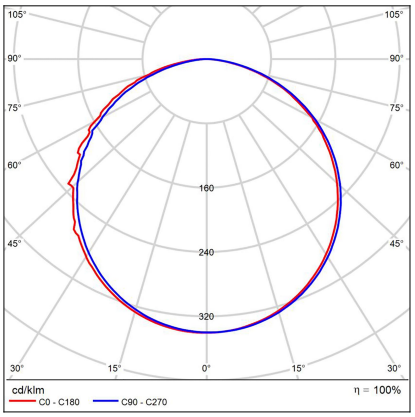
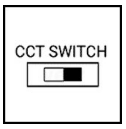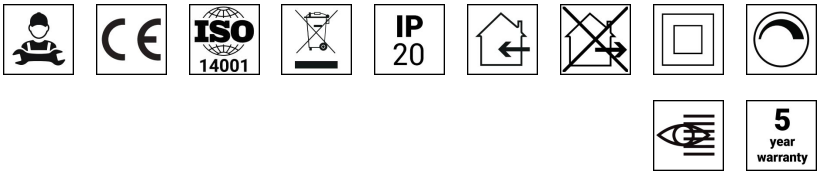
Code:	1272173DT
Color:	BLACK / 9017
Material:	METAL/PMMA
Power:	60W
Color temperature:	2700K/3000K/4000K
Lumen output:	4000lm
Efficacy:	67lm/W
Color rendering index:	90+
SDCM:	< 3
Light beam angle:	160°
Light Source:	LED
Dimmable:	TRIAC
LED lifetime:	L80B20 50.000h
Driver:	2x 950 mA
Voltage / Frequency:	220-240V AC, 50-60Hz
Dimensions luminaire:	d600x90 mm
Product weight kg:	4.25
Package dimensions:	640x640x130 mm