Paulmann

Safety Instructions

Info Hotline

+49 (0) 5041 998 389
Mon. - Do. 7⁰⁰ - 20⁰⁰
Fr. 7⁰⁰ - 17⁰⁰

Paulmann Licht GmbH
Quezinger Feld 2
31832 Springe
Germany

www.paulmann.com
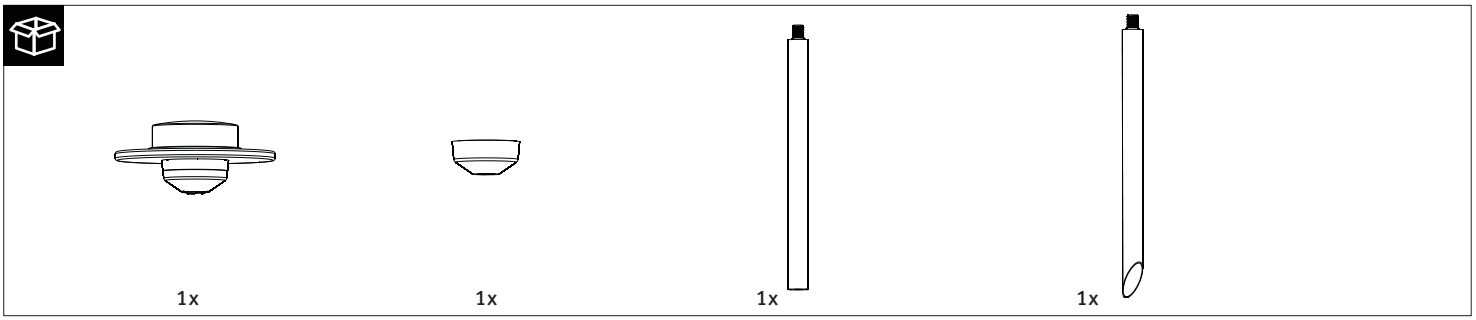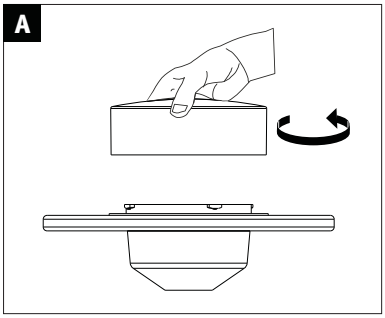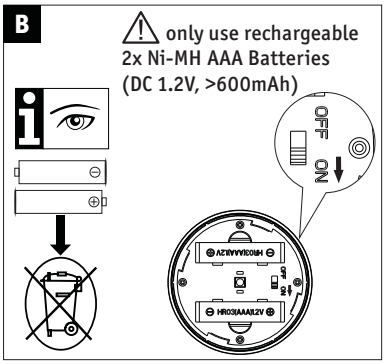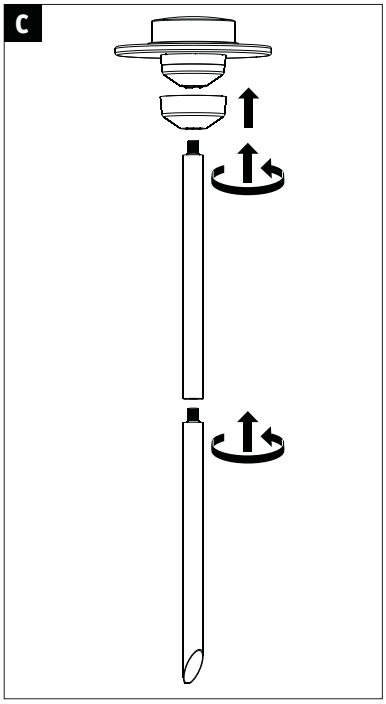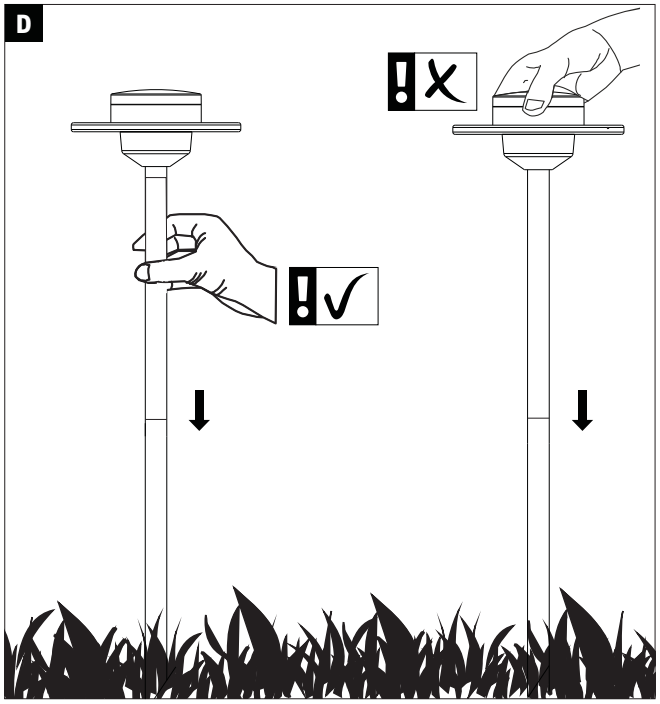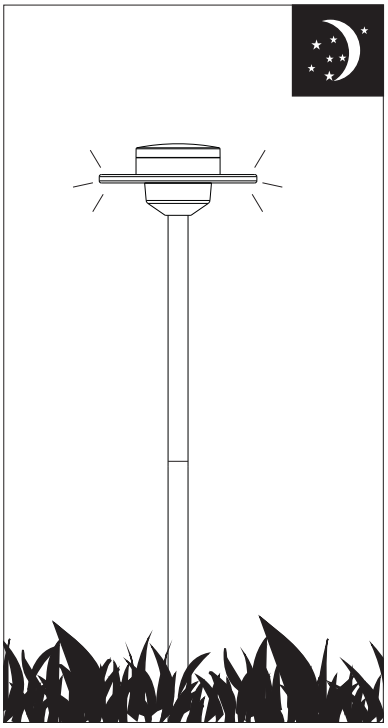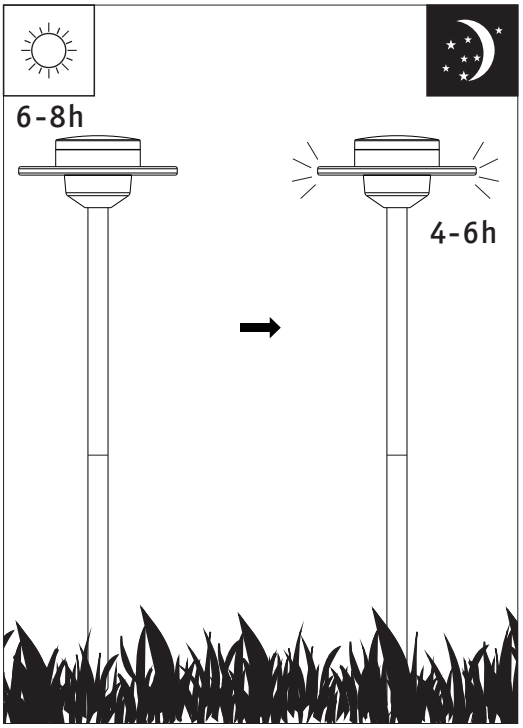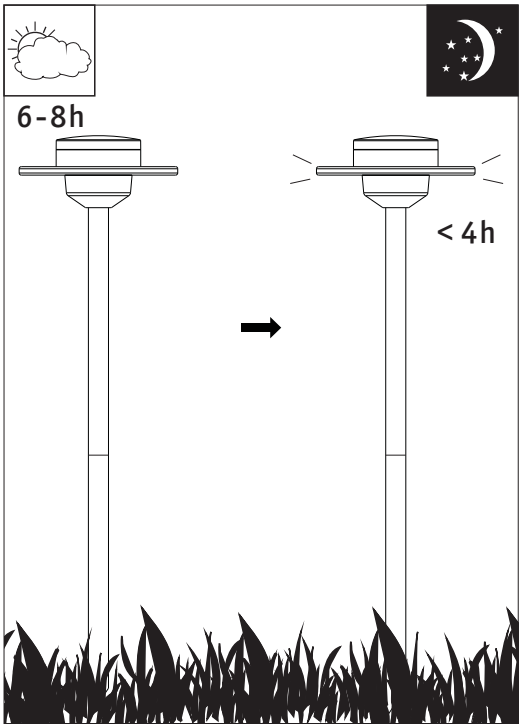
Art.-Nr.:**937.64/936.99** (+MA 321) PH 10/15