Paulmann

Safety Instructions

1, 2, 3, 4, 5, 6, 7, 8,14
19,28,33, 34

Info Hotline

+49 (0) 5041 998 389

Mon. - Do. 7⁰⁰-20⁰⁰
Fr. 7⁰⁰-17⁰⁰

Paulmann Licht GmbH
Quezinger Feld 2
31832 Springe
Germany

www.paulmann.com

Art.-Nr.: **796.28**
796.29
(+MA0326) PLUX **01/17**

CE

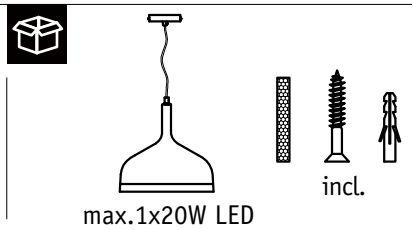

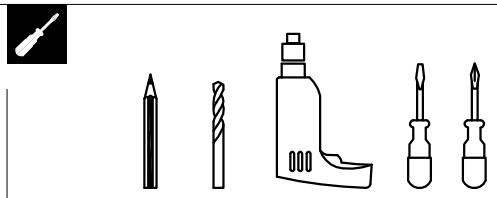

A

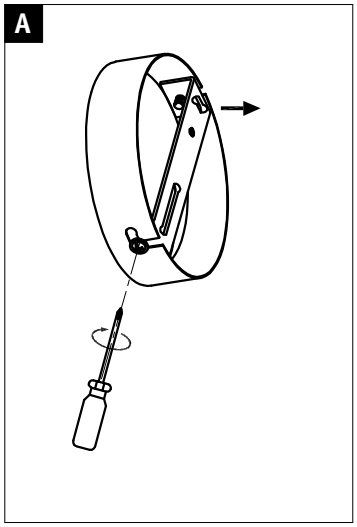

B

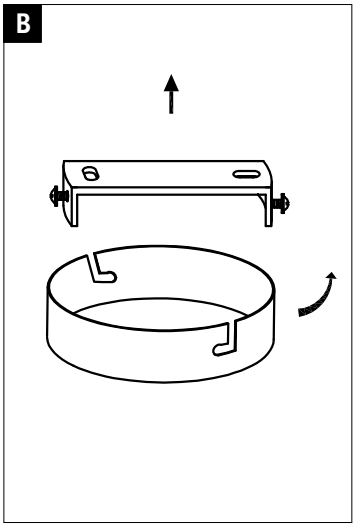

C

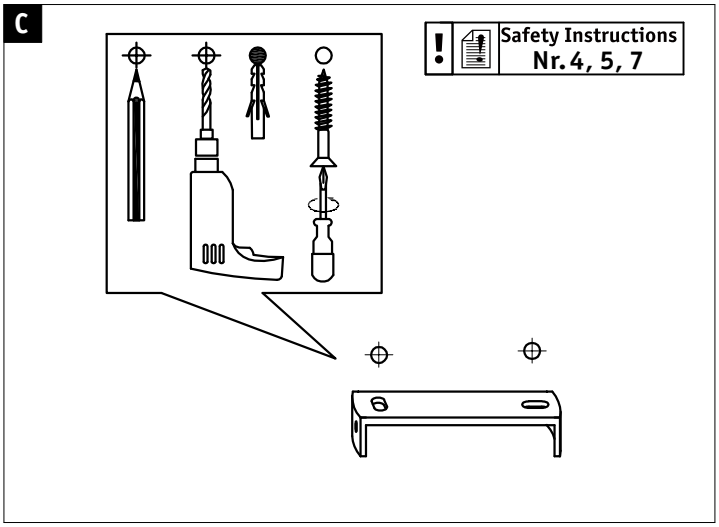

D

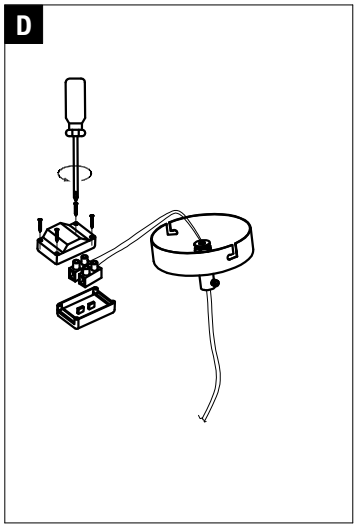

E

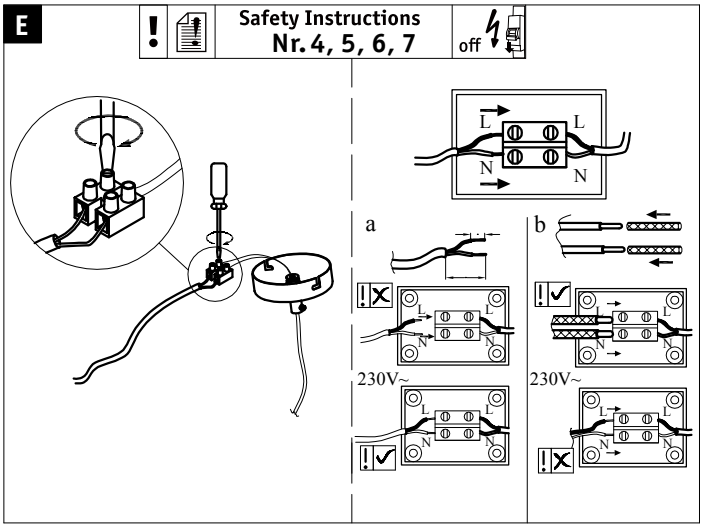

F

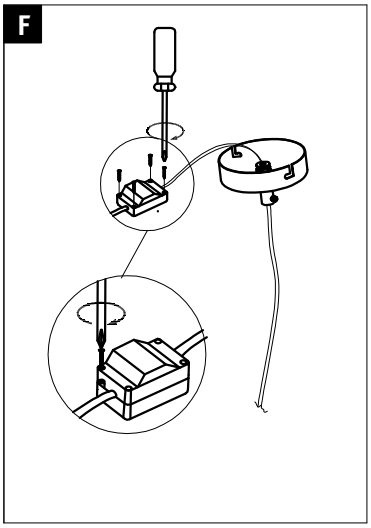

G

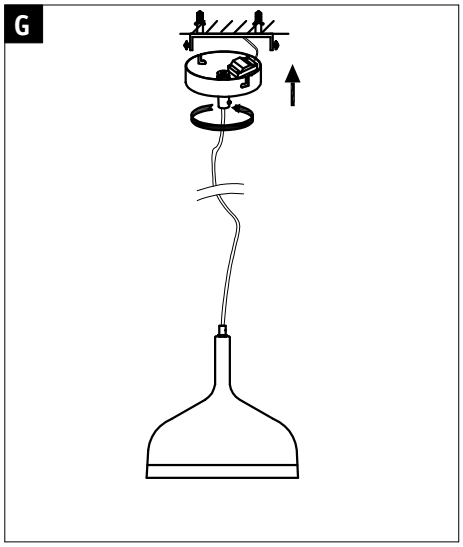
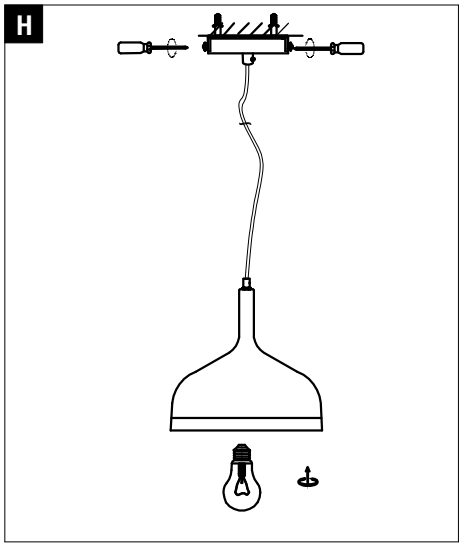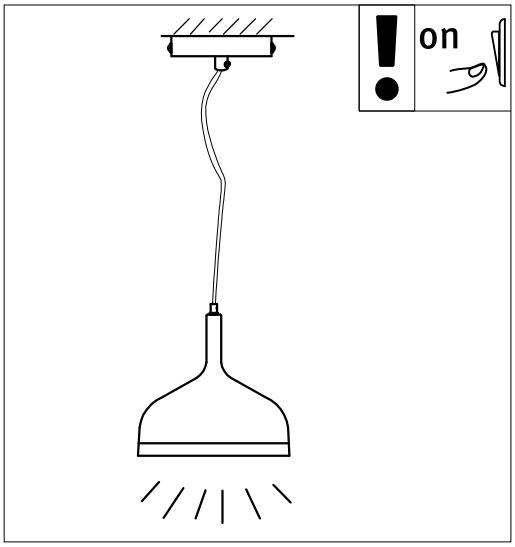
H