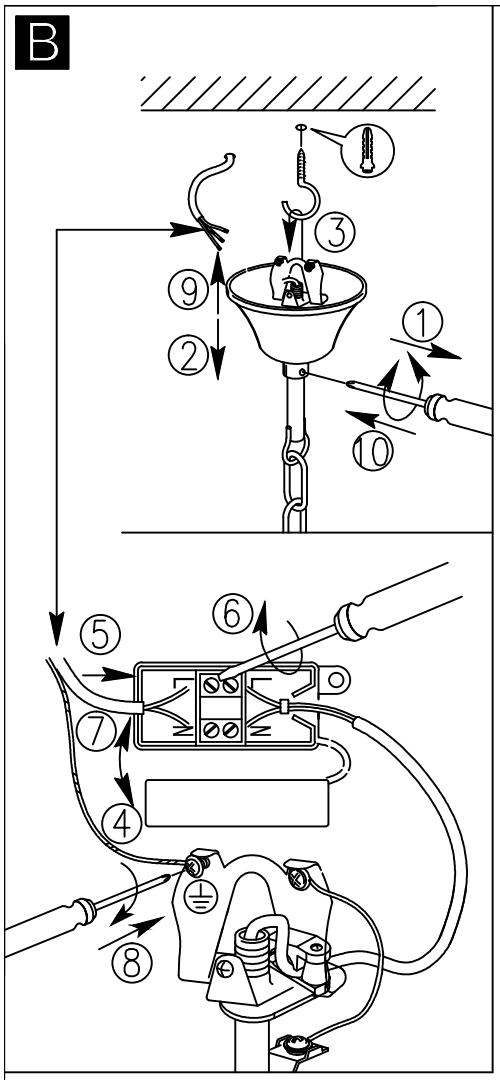

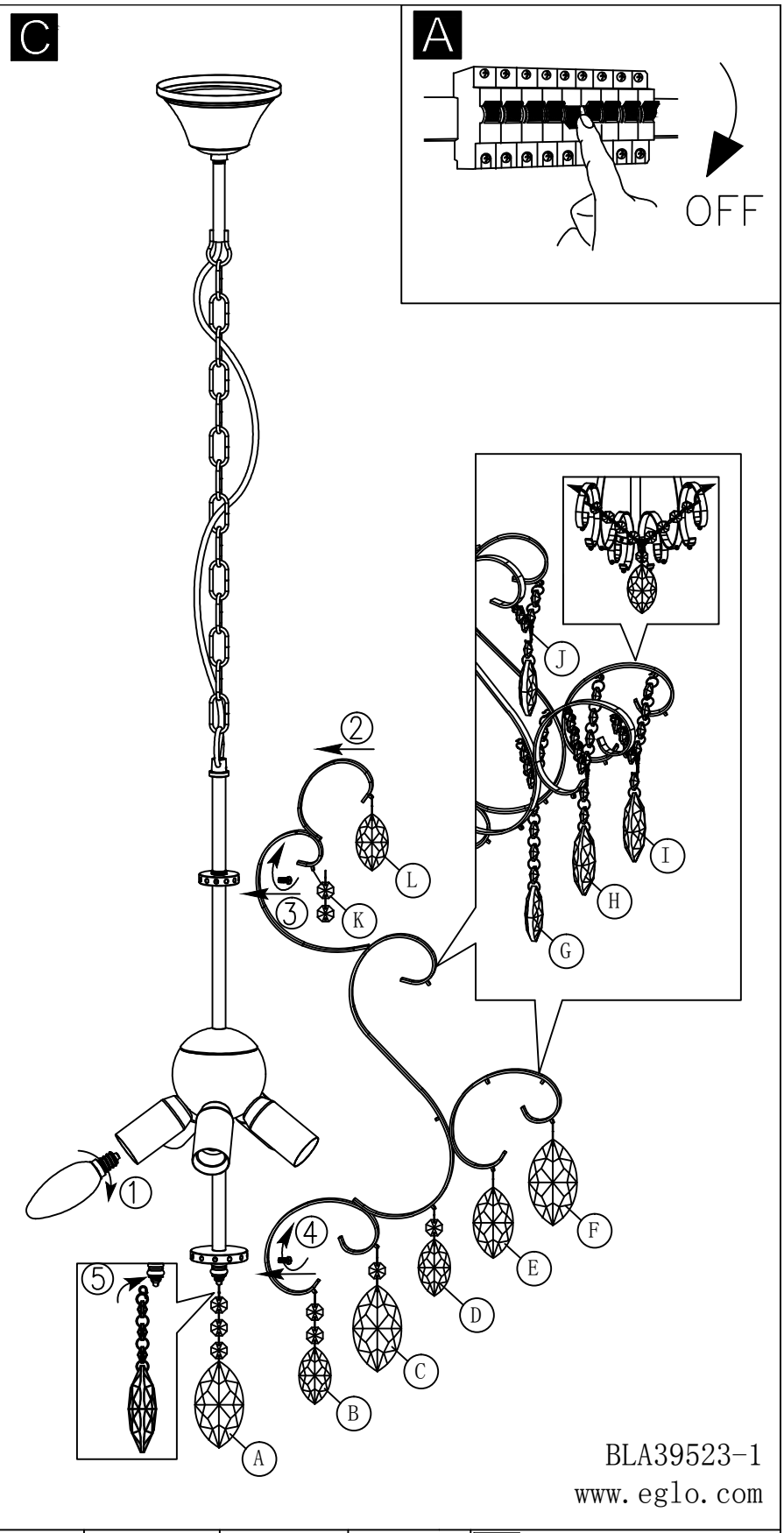

A X 1PCS	B X 12PCS	C X 12PCS
D X 12PCS	E X 12PCS	F X 12PCS

BLA39523-1
www.eglo.com

G X 12PCS	H X 12PCS	I X 12PCS	J X 12PCS	K X 12PCS	L X 12PCS